mahindra
TRUCK AND BUS




## INDIA KA SABSE iNTELLIGENT TRUCK

**ZYADA KAMAAI**
Earn up to ₹ 15 lakh additional profit over 5 years.*

**ZYADA UPTIME**
Road ready in 48 hrs warna roz ke ₹ 10 000.00*

**ZYADA CONTROL**
iMAXX 2.0 for full business control*

iMAXX 2.0

now
1800-200-3600
24/7 VEHICLE ASSISTANCE BY EXPERTS
A MULTILINGUAL SERVICE

*T&C apply, which are available on our website and the dealerships. The image shown is a graphical representation.
Features shown are for promotional purpose and may not be a part of the standard equipment.

# BLAZO i-TRK 55

| | |
|---|---|
| GCW | 55000 Kg |
| Engine | mPower 7.2L 6 Cyl. |
| Max. Power | 239 kW/320 HP @ 2200 rpm |
| Max. Torque | 1100 Nm @ 1100-1700 rpm |
| Clutch Dia | 430 mm |
| Gearbox | ZF 9 Speed - Manual |
| Front Suspension | Parabolic Leaf Spring |
| Rear Suspension | Bell Crank Type Suspension |
| Front Axle | Forged I-beam Reverse Eliot type |
| Rear Axle | Banjo Type Single Reduction |
| Fuel tank capacity | 415 L |
| Adblue tank capacity | 50 L |
| Chassis dimension (mm) | 285x70x8.5 with Reinforcement |
| Steering | Hydraulic Power Assist Tilt & Telescopic |
| Brakes | Full Air S Cam Dual circuit ABS 10 BAR system |
| Battery Capacity | 24 V – 120AH |
| Wheelbase | 4100 |
| Tyre | 295/90R20 |
| Max Gradeability | 18.90% |
| Cabin | AC Sleeper Cabin |
| Music System | 1 DIN with bluetooth connectivity |



STAY CONNECTED WITH MAHINDRA NOW 24X7
**END-TO-END DIGITAL CUSTOMER EXPERIENCE**

NETWORK REACH
**450+ SERVICE TOUCH POINTS.**
NATIONAL HIGHWAY - EVERY 75 KM
STATE HIGHWAY - EVERY 50 KM

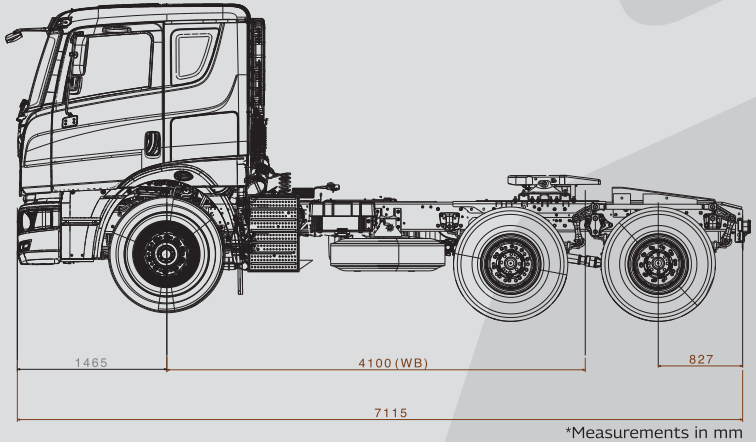


*Measurements in mm

iFUELSMART | mPOWER 320 | TurboMAXX | OptiFuel | COMFiMAXX | EzyCruise

To know more, give us a missed call on **1800 315 7799** or visit us at www.mahindratruckandbus.com

Authorised Dealer Stamp

Note: In view of our policy of continuously improving our products, we reserve the right to alter specifications or design without prior notice and without liability. Illustrations do not necessarily show the vehicle in its standard form. Accessories shown are not part of the standard equipment. Colour shades shown may vary. E. & O.E.