mahindra
TRUCK AND BUS

NAYA BLAZO i-TRK 40

PROFIT KA ROCKET



INDIA KA SABSE INTELLIGENT TRUCK

ZYADA KAMAAI
Earn up to ₹ 15 lakh additional profit over 5 years.*

ZYADA UPTIME
Road ready in 48 hrs warna roz ke ₹ 10 000.00*

ZYADA CONTROL
iMAXX 2.0 for full business control*

iMAXX 2.0

now
1800-200-3600
24/7 VEHICLE ASSISTANCE BY EXPERTS
A MULTILINGUAL SERVICE

*T&C apply, which are available on our website and the dealerships. The image shown is a graphical representation.
Features shown are for promotional purpose and may not be a part of the standard equipment.

BLAZO i-TRK 40

GCW	39500 kg
Engine	mPower 7.2L 6 Cyl.
Max. Power	239 kW/320 HP @ 2200 rpm
Max. Torque	1100 Nm @ 1100-1700 rpm
Clutch Dia	395 mm
Gearbox	Eaton 6 Speed - Manual
Front Suspension	Semi Elliptical Leaf Spring
Rear Suspension	4 Spring Suspension with Compensating Link Mechanism (CLS)
Front Axle	Forged I-beam Reverse Eliot type
Rear Axle	Banjo Type Single Reduction
Fuel tank capacity	330 L | 415 L
Adblue tank capacity	50 L
Chassis dimension (mm)	285x70x8.5
Steering	Hydraulic Power Assist Tilt & Telescopic
Brakes	Full Air S Cam Dual circuit ABS 10 BAR system
Battery Capacity	24 V – 150AH | 24 V – 120AH
Wheelbase	3075 | 3600
Tyre	295/90R20
Max Gradeability	16.50%
Cabin	AC Sleeper Cabin
Music System	1 DIN with bluetooth connectivity



STAY CONNECTED WITH MAHINDRA NOW 24X7
END-TO-END DIGITAL CUSTOMER EXPERIENCE

NETWORK REACH
450+ SERVICE TOUCH POINTS.
NATIONAL HIGHWAY - EVERY 75 KM
STATE HIGHWAY - EVERY 50 KM

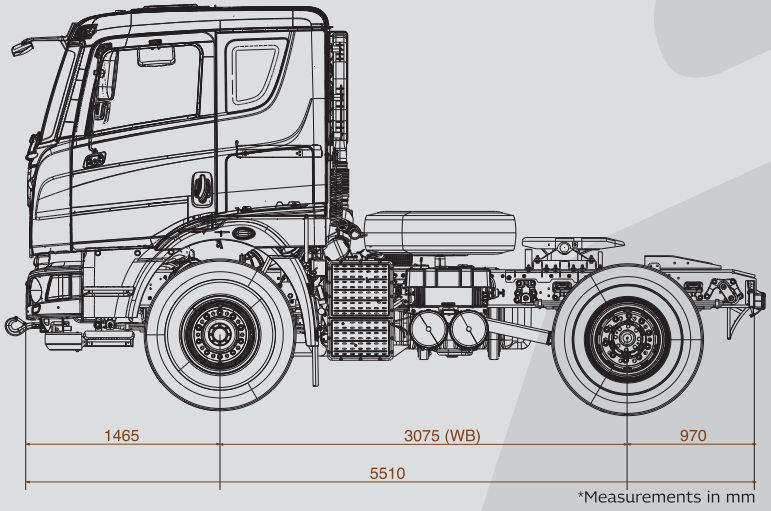

*Measurements in mm

mPOWER 320 | TurboMAXX | OptiFuel | COMFIMAXX

To know more, give us a missed call on **1800 315 7799** or visit us at www.mahindratruckandbus.com

Authorised Dealer Stamp

Note: In view of our policy of continuously improving our products, we reserve the right to alter specifications or design without prior notice and without liability. Illustrations do not necessarily show the vehicle in its standard form. Accessories shown are not part of the standard equipment. Colour shades shown may vary. E. & O.E.